H-14
Roofing Tile

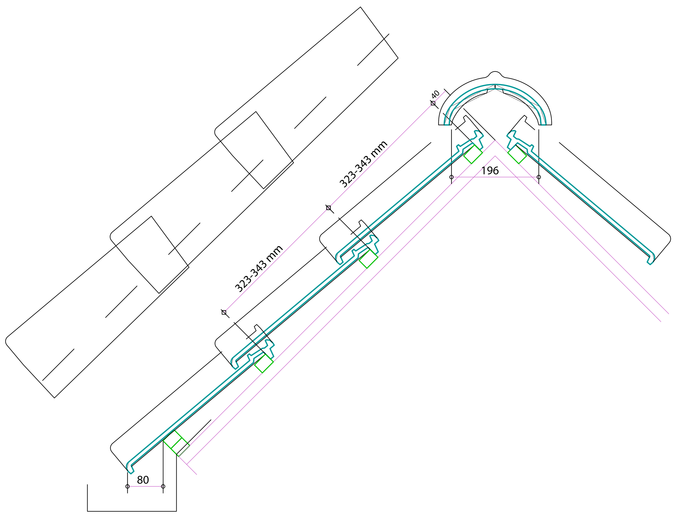


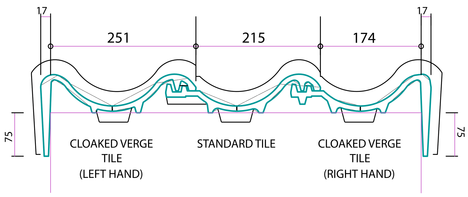


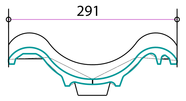


LEFT HAND VERGE DOUBLE ROLL TILE

H-14
Roofing Tile

MONO RIDGE TILE

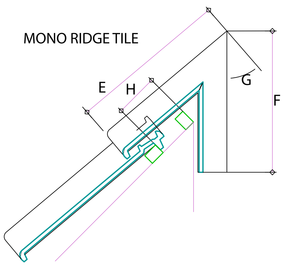


INTERNAL MANSARD TILE

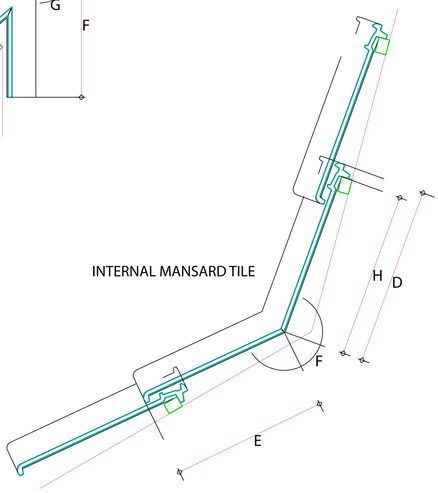


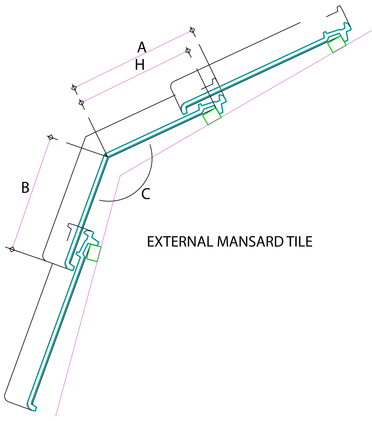


EXTERNAL MANSARD TILE

**STANDARD TAPERED RIDGE**

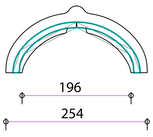


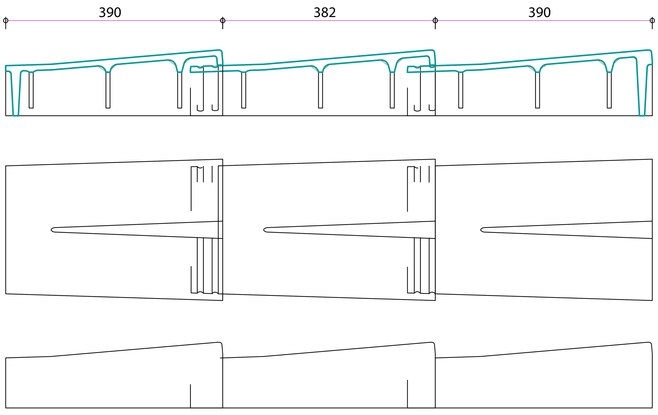


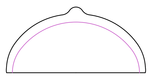

H-14
Roofing Tile